60 cm fully integrated dishwasher
Heritage Series

DW603PRDV

The Bertazzoni 60 cm fully-integrated dishwasher is large enough for up to 15 place settings on three racks. Touch controls with LED display let you access 9 programmes from Eco to Intense, with 5 functions. A turbo drying system ensures quick drying at the end of the programme. It's insulated to keep noise levels at a low 42db. Like all Bertazzoni dishwashers, it is A+++ energy rated.

Guarda online

Specifications

Features

General features	
Size	60 cm
Place setting	15
Sound level maximum speed (dbA)	42 dbA
User interface	LED
Spray arms	2
Number of racks	3
Wash cycles	9 (Daily smart, Delicate smart, Eco, Intense, Intense smart, Quick 14', Quick 30', Quick 50', Smart pro wash)
Functions	5 (Energy save, Extra dry, Extra fast, Extra silent, Half load)

Technical specifications	
Power rating	975 W
Energy class	A+++
Voltage and frequency	220-240V/50Hz

Dimensions

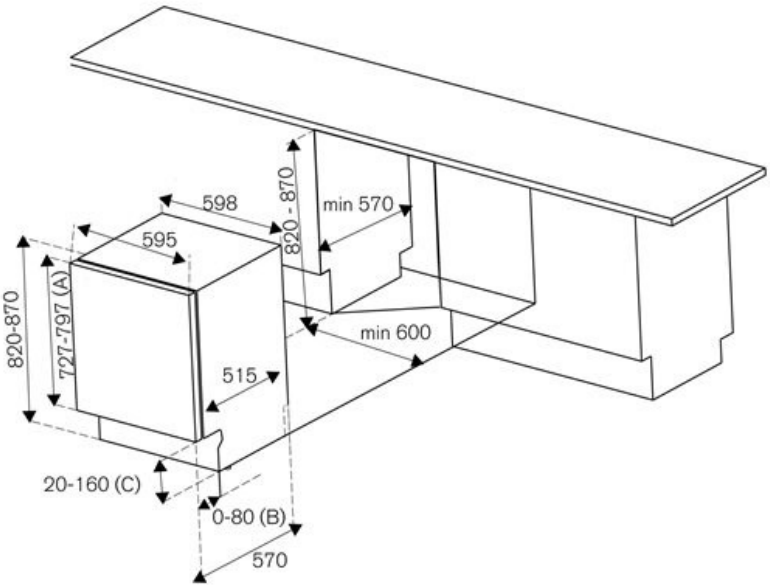
598
595
820 - 870
min 570
820-870
727-797 (A)
min 600
515
20-160 (C)
0-80 (B)
570