# 60x45cm Combi-Microwave Oven
Heritage Series

**F457HERMWTNE**

This Bertazzoni Professional Series 60x45 cm combi microwave has 7 functions. It offers all the benefits of a multi-function electric oven and microwave oven in one. With two levels, it is big enough to cook for the whole family and features two technologies for the versatility of convection, regular or grill-heating modes. The microwave has five power levels and boost function to significantly reduce cooking times compared to a conventional oven. Controlled with metal knobs and a TFT display, there is a soft opening door with a metal handle for ease of use. Available in Matt Black and Ivory with chrome details.

Guarda online

# Specifications

## Features

| Compact oven features | |
|---|---|
| Special functions | defrost by time / defrost by weight |
| Size | 60x45 cm |
| Microwave type | combi-microwave |
| Functions | convection / convection grill / grill / microonde combinato / microwave / microwave with grill |
| Total volume | 38 L |
| Oven controls | knobs / touch TFT display |
| Auto cooking modes | 15 preset |
| Inner oven door | double |
| Cavity finishing | stainless steel |
| Oven levels | 2 |
| Door hinges | soft-motion |
| Oven handle | metal |
| Wire-shelves | 1 |
| Tray | 1 glazen |
| Oven lights | single |
| Turntable quantity | 1 glass |
| Turntable diameter | 32 cm |

| Technical specifications | |
|---|---|
| Energy class | A |
| Voltage and frequency | 220/240 V - 50/60 Hz |
| Absorbed power (W) | 3400 W |
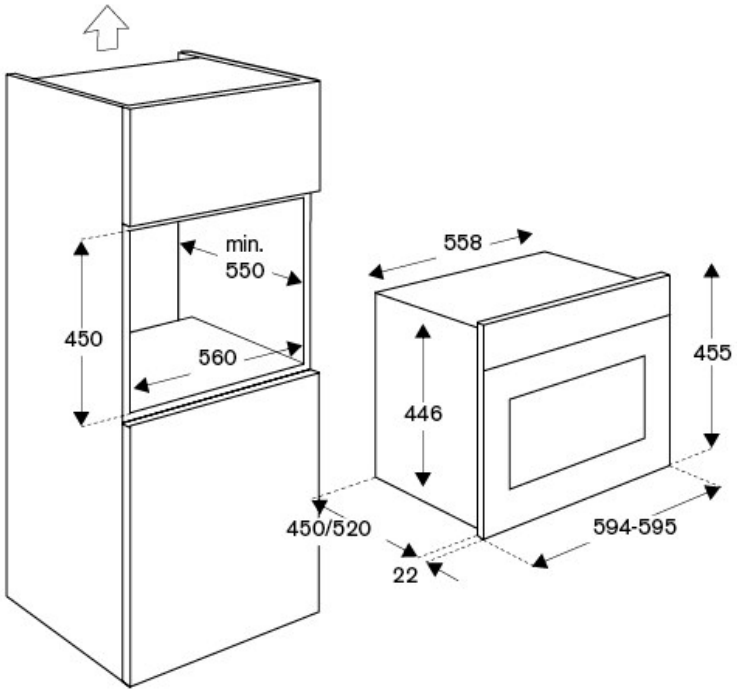
## Dimensions