60 cm fully Integrated Dishwasher

Modern Series

DW60EPR

The Bertazzoni 60 cm fully integrated dishwasher is large enough for up to 12 place settings on two racks. Electronic controls and LED display let you access 4 different programmes. It's insulated to keep noise levels at a low 49 db (A). This Bertazzoni dishwasher is A++ energy rated.

Guarda online

Specifications

Features

General features	
Size	60 cm
Place setting	12
User interface	electronic touch control with LED screen on the door
Spray arms	2
Number of racks	2
Programs	4 (Heavy, Eco, 90min, Quick)

Technical specifications	
Power rating	975 W
Energy class	A++
Voltage and frequency	220-240V/50Hz
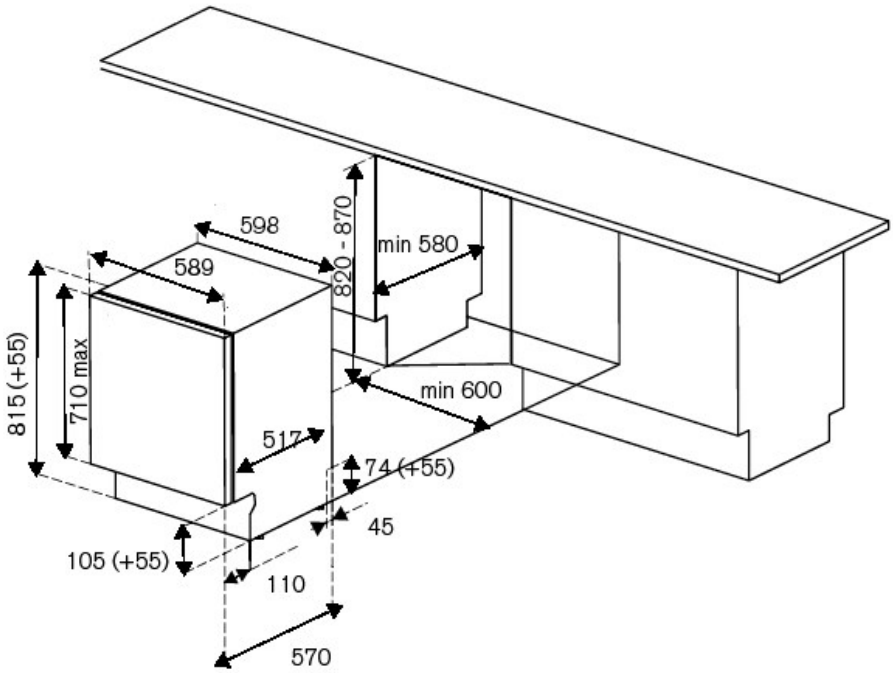
Dimensions