78 cm Induction Hob, 3 multizone
Modern Series

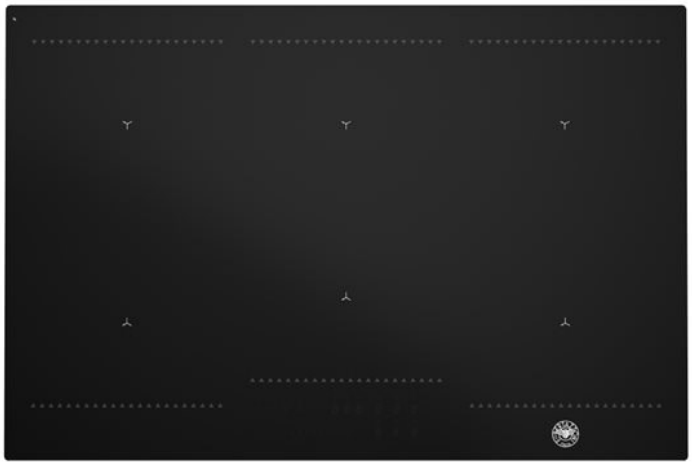

P786IM3B2NE

The Modern Series 78cm induction hob features six induction zones. There are three multi-zones that let you specify the cooking area to fit a specific pan size and a bridge zone. Choose from 14 power levels with boosters on all zones for even faster cooking. The built-in timer and slim slider controls make it simple to operate accurately.

Guarda online

Specifications

Features

Worktop	
Size	78 cm
Number of induction zones	6
Worktop type	induction
Worktop design	ceramic glass bevelled
Worktop controls	touch controls
Timer	yes
Pause	yes
Recall	yes
Auto temperature settings	yes
Power levels	14
Safety induction cooktop	child lock / residual heat indicator / automatic switch off / pot detection
Cooking zones	
Induction bridge zones	flex
Induction left multizone	400x210mm / 3 kW (booster)
Induction right multizone	400x210mm / 3 kW (booster)
Induction center	400x210mm / 3 kW (booster)
Technical specifications	
Voltage and frequency	220/240 V - 50/60 Hz
Absorbed power (W)	11,1 kW
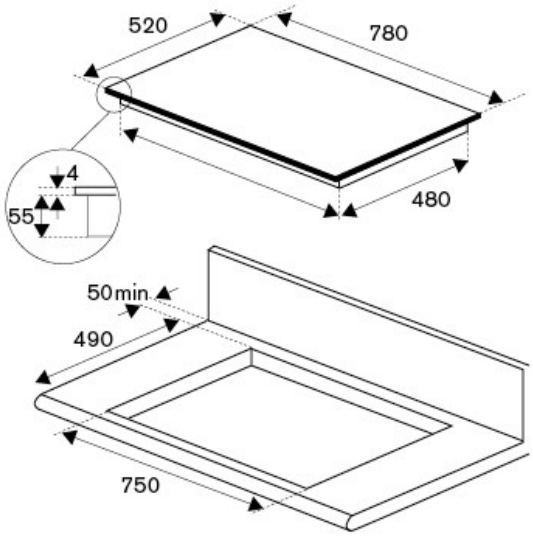
Dimensions