90cm built-in bottom mount refrigerator, panel ready with ice maker and water dispenser

Modern Series

RBM90S5FPNS

This Bertazzoni 90 cm built-in refrigerator freezer is engineered and manufactured to meet the highest grade of quality and performance.

This unit has ample storage capacity, with 399 L of refrigerator volume and 157 L of freezer space. The refrigerator compartment has 3 shelves of which 2 are height-adjustable and 2 full extension crispers. Additionally, it features 1 Fresco drawer with separate digital controls. This zone precisely keeps the temperature -1°C to +5°C, preserving fresh food nutrients, flavors, and visual appearance substantially longer. The Dual Cooling Total No Frost provides an automatic defrosting function for both evaporators to ensure optimized food storage conditions. The freezer compartment has 2 metal drawers and an automatic ice maker.

The electronic touch-control LED interface simplifies setting and monitoring of all vital functions. LED lights on the top and sidewall provide clear illumination of the interior space. The internal water dispenser is equipped with an inline filter for hygienically clean drinking water and ice.

E Energy Rating ensures a highly reduced energy consumption, while providing optimal performance ratings

All Bertazzoni appliances are covered by a 2-year warranty.

Guarda online

Specifications

Features

General features	
Size	90 cm
Cooling system	Total No Frost
User interface	internal digital LED touch interface
Display functions	Super cool, super freeze, ice maker, water filter replacement alarm, water dispenser, eco mode, vacation mode, sabbath mode
Lighting	LED lights on sides and top
Open door alarm	yes
Door finishing	panel ready
Cabinet finishing	white plastic and stainless steel
Refrigerator net capacity	399 L
Wine racks	1 stationary + 2 height-adjustable
Refrigerator drawers	1 + 1 with separate temperature control
Bins	3 bins
Freezer net capacity	157 L
Freezer drawers	2 full extension drawers
Automatic ice maker	yes
Ice production capacity	1,8 kg / 24 h
Water filter	internal
Water supply pressure	Min 0.17 MPa (1.7 bar, 25 PSI) Max 0.55 MPa (5.5 bar, 80 PSI)
Sound rating	41 dbA

Technical specifications	
Energy class	E
Voltage and frequency	220-240 V , 50/60 HZ
Absorbed power (W)	120 W
Annual energy consumption (kWh)	330

Dimensions

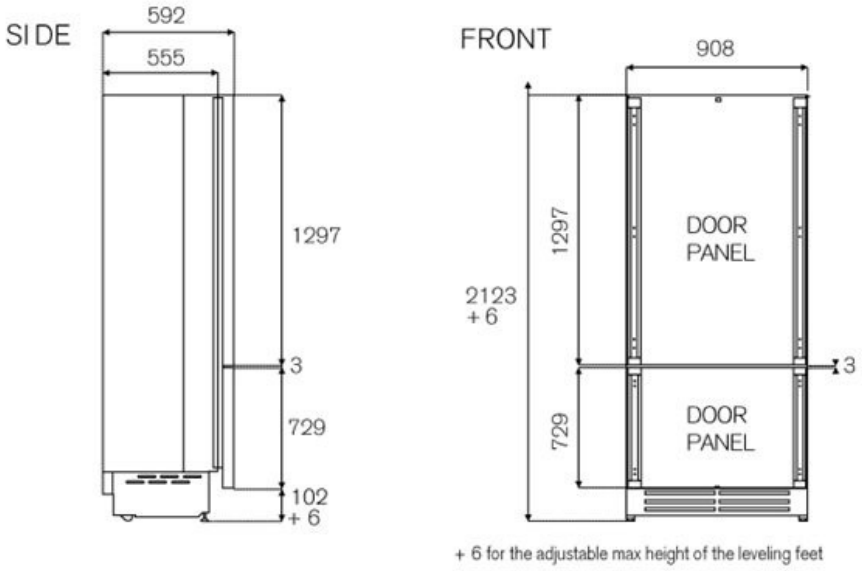
SIDE
592
555
1297
3
729
102
+ 6
FRONT
908
2123
+ 6
1297
DOOR
PANEL
3
729
DOOR
PANEL
+ 6 for the adjustable max height of the leveling feet