86 cm built-in hood, 1 motor
Modern Series

KIN86MOD1XB

The Bertazzoni Modern Series 86cm built-in hood is finished in stainless steel. It has a single motor offering three speeds and effective aluminium filters. Electronic button controls make it simple to adjust and two bright LED lights make it easy to see what you are doing on the hob. The powerful motor extracts 710 m3h max.

Guarda online

Specifications

Features

General features	
Size	86 cm
Hood type	built-in
Hood control	electronic with buttons
Motor	1
Speed	3 + booster
Filters type	aluminum
Lights	2 LED
Saturation Alarm	yes
Hood finishing	stainless steel
Timer	yes
Sound rating	70 dBA
Output air extraction (m^3/h)	710 m3h

Technical specifications	
Voltage and frequency	220/240 V - 50/60 Hz
Absorbed power (W)	250 W
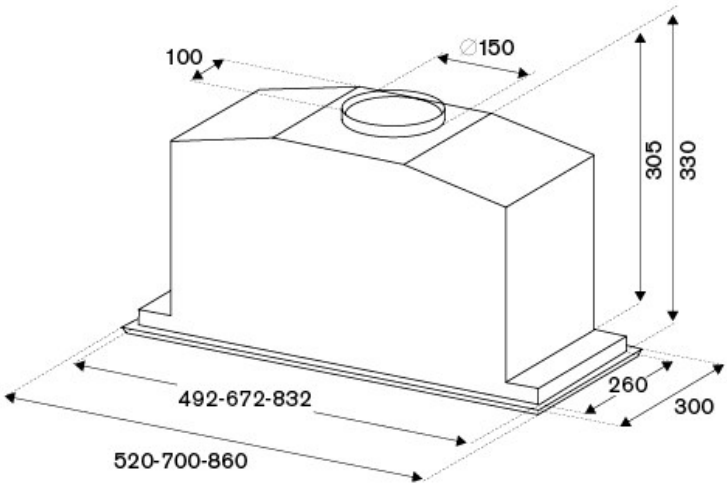
Dimensions