60cm gas on glass hob
Professional Series

P604PROGNE

This Bertazzoni Professional Series 60cm gas hob is finished in stylish black glass. With four matt black monobloc burners and accurate metal control knobs, it makes cooking simple, versatile and precise. A 4kW wok ring gives you even more choices. The single cast iron pan support is both solid and secure for safe use.

Guarda online

Specifications

Features

Worktop	
Size	60 cm
Number of gas zones	4
Worktop type	gas
Worktop design	tempered glass
Worktop controls	knobs
Knobs	solid metal
Burners type and caps	matt black mono-block
Pan supports	cast iron
Flame failure device	yes
Ignition	yes
Cooking zones	
Rapid	1.05 kW - 3 Kw
Semi-rapid	0.60 kW - 1.75 kW
Auxiliary	0.48 kW - 1 kW
Technical specifications	
Voltage and frequency	220/240 V - 50/60 Hz - 1 A
Absorbed power (W)	1 W
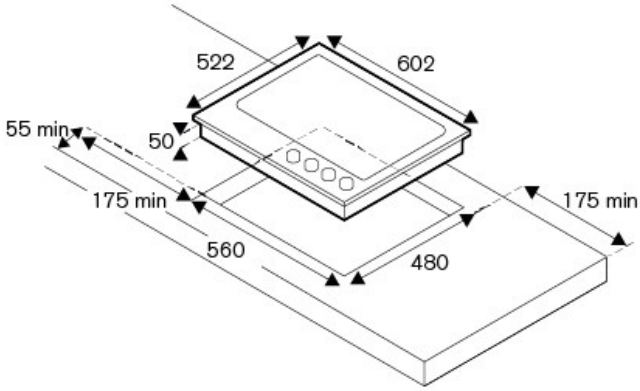
Dimensions